Index

Floating Suction Cup Page 564

· Floating suction cup
· Diameter range: Ø20 ~ Ø60
· Material selection: Aluminum, Peek

Solar Master Page 578

· VMECA vacuum cartridge technology integrated
· Low air consumption while achieving very fast and stable vacuum
· Available for various sizes according to wafer size

Needle Gripper Page 580

· Double-acting pneumatic cylinder for safe handling of work pieces
· Variable needle stroke for widely covering applications
· Easy operation and maintenance

MINI V-GRIP (G16, G20, G30, G60 series) Page 582

· Integrated VMECA cartridge technology inside
· Handles various products with different shapes, sizes and porous material
· Flexible sealing foam(EPDM) for excellent gripping

NF Series

Features and Strengths

Integrated with multi-stage vacuum generator
Large vacuum flow and powerful suction force in non-contact handling

Advantages

Handling thin and porous items without damage and deformation
High vacuum flow and efficient compressed air-consumption

Application

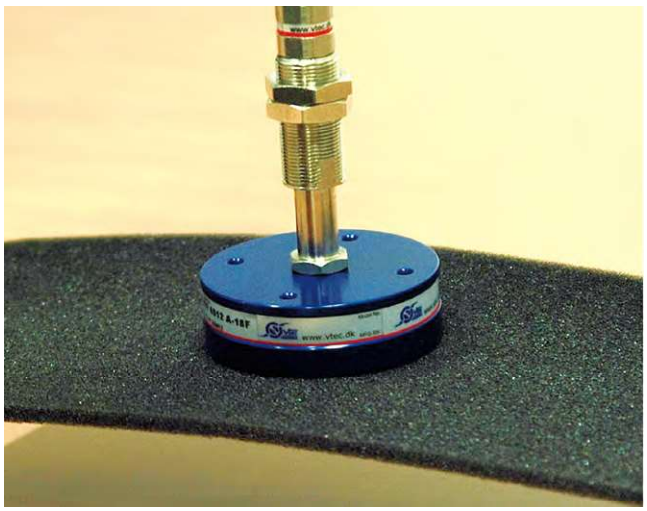

Examples of use

Circuit boards, Solar cells, PCB boards, Wafer, Food, Paper Film, CDs and DVDs

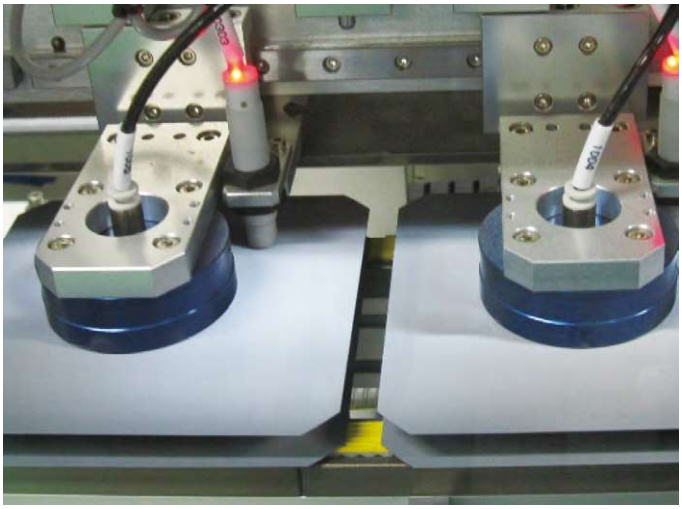

Available size option

Model	Description	Model	Description
NF20-06	Floating suction cup, Ø20	NF60-06	Floating suction cup, Ø60
NF20-12	Floating suction cup, Large flow, Ø20	NF60-12	Floating suction cup, Large flow, Ø60
NF40-06	Floating suction cup, Ø40		
NF40-12	Floating suction cup, Large flow, Ø40		

Recommended Lifting Force (Max.)

Model	Operating Pressure	Air Consumption (Nl/min)			Lifting Force (Kg) – Perpendicular			Page
		4bar	5bar	6bar	4bar	5bar	6bar	
NF20-06	4~6	58	67	78	0.16	0.19	0.21	566
NF20-12	4~6	116	135	154	0.19	0.25	0.35	566
NF40-06	4~6	58	67	78	0.29	0.39	0.49	568
NF40-12	4~6	116	135	154	0.49	0.59	0.68	568
NF60-06	4~6	105	123	126	0.59	0.79	0.89	570
NF60-12	4~6	160	190	223	0.99	1.25	1.49	570

※ The lifting force above does not include safety factor

Principle of Operation

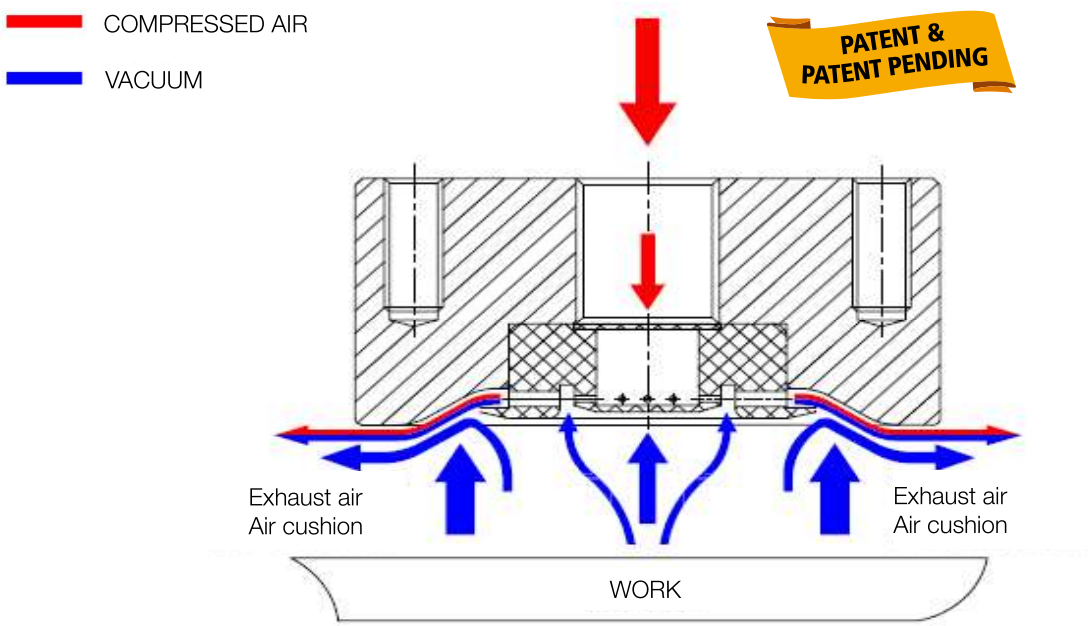

NF20

Features and Strengths

Integrated with multi-stage vacuum generator
Large vacuum flow and powerful suction force in non-contact handling

Examples of use

Circuit boards, Solar cells, PCB boards, Wafer, Food, Paper
Film, CDs and DVDs

Recommended Lifting Force (Max.)

Model	Operating Pressure (bar)	Air Consumption (Nl/min)			Lifting Force (Kg) – Perpendicular		
		4bar	5bar	6bar	4bar	5bar	6bar
NF20-06	4~6	58	67	78	0.16	0.19	0.21
NF20-12	4~6	116	135	154	0.19	0.25	0.35

※ The lifting force above does not include safety factor

Dimension

[Unit : mm]

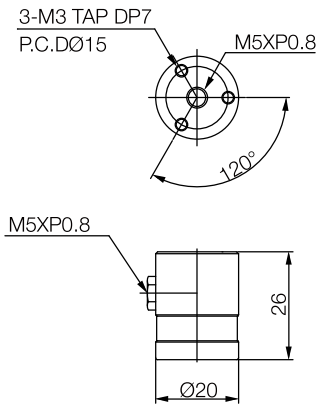

[Without peek points]

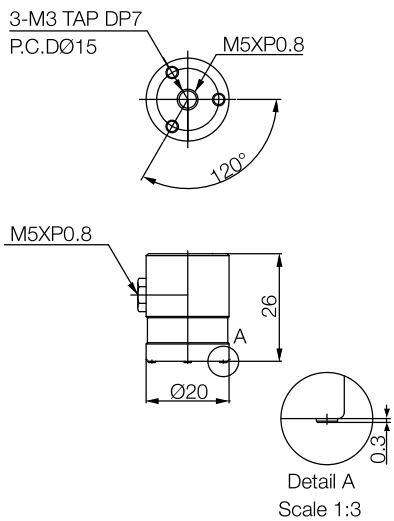

[With peek points]

Build an Ordering No.

NF20 - ◯◯ - ◯ - ◯◯ - M5F : Pre-mounted fitting

1. Suction Cup

1. Suction cup	Description	Weight (g)	Symbol
	Floating suction cup, 20mm diameter, Aluminum, Fitting, M5xP0.8 female fitting	19.1	NF20-06-A-M5F
	Floating suction cup, 20mm diameter, Peek, M5xP0.8 female fitting	11.32	NF20-06-P-M5F
	Floating suction cup, 20mm diameter, Large flow, Aluminum, M5xP0.8 female fitting	19.03	NF20-12-A-M5F
	Floating suction cup, 20mm diameter, Large flow, Peek, M5xP0.8 female fitting	11.4	NF20-12-P-M5F
	Floating suction cup, 20mm diameter, 4-Peek points, Aluminum, M5xP0.8 female fitting	19.5	NF20-06-4P-M5F
	Floating suction cup, 20mm diameter, 4-Peek points, Peek, M5xP0.8 female fitting	11.5	NF20-06-P-4P-M5F
	Floating suction cup, 20mm diameter, Large flow, 4-Peek points, Aluminum, M5xP0.8 female fitting	19.6	NF20-12-4P-M5F
	Floating suction cup, 20mm diameter, Large flow, 4-Peek points, Peek, M5xP0.8 female fitting	11.54	NF20-12-P-4P-M5F

NF40

Features and Strengths

Integrated with multi-stage vacuum generator
Large vacuum flow and powerful suction force in non-contact handling

Examples of use

Circuit boards, Solar cells, PCB boards, Wafer, Food, Paper
Film, CDs and DVDs

Recommended Lifting Force (Max.)

Model	Operating Pressure (bar)	Air Consumption (Nl/min)			Lifting Force (Kg) – Perpendicular		
		4bar	5bar	6bar	4bar	5bar	6bar
NF40-06	4~6	58	67	78	0.29	0.39	0.49
NF40-12	4~6	116	135	154	0.49	0.59	0.68

※ The lifting force above does not include safety factor

Dimension

[Unit : mm]

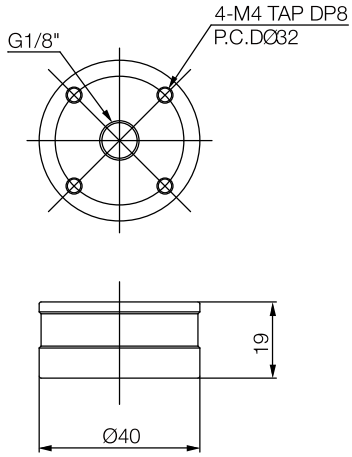

[Without peek points]

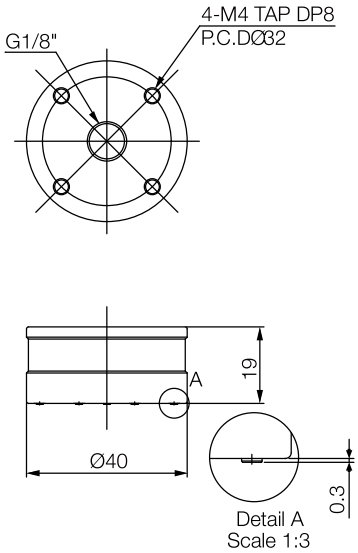

[With peek points]

Build an Ordering No.

NF40 - ◯◯ - ◯ - ◯◯ - 18F

1. Suction Cup

: Pre-mounted fitting

1. Suction cup	Description	Weight (g)	Symbol
	Floating suction cup, 40mm diameter, Aluminum, Fitting, G1/8 female fitting	54.75	NF40-06-A-18F
	Floating suction cup, 40mm diameter, Peek, G1/8 female fitting	29.2	NF40-06-P-18F
	Floating suction cup, 40mm diameter, Large flow, Aluminum, G1/8 female fitting	54.68	NF40-12-A-18F
	Floating suction cup, 40mm diameter, Large flow, Peek, G1/8 female fitting	29.17	NF40-12-P-18F
	Floating suction cup, 40mm diameter, 9-Peek points, Aluminum, G1/8 female fitting	54.42	NF40-06-9P-18F
	Floating suction cup, 40mm diameter, 9-Peek points, Peek, G1/8 female fitting	30.1	NF40-06-P-9P-18F
	Floating suction cup, 40mm diameter, Large flow, 9-Peek points, Aluminum, G1/8 female fitting	54.37	NF40-12-9P-18F
	Floating suction cup, 40mm diameter, Large flow, 9-Peek points, Peek, G1/8 female fitting	30.15	NF40-12-P-9P-18F

NF60

Features and Strengths

Integrated with multi-stage vacuum generator
Large vacuum flow and powerful suction force in non-contact handling

Examples of use

Circuit boards, Solar cells, PCB boards, Wafer, Food, Paper
Film, CDs and DVDs

Recommended Lifting Force (Max.)

Model	Operating Pressure (bar)	Air Consumption (Nl/min)			Lifting Force (Kg) – Perpendicular		
		4bar	5bar	6bar	4bar	5bar	6bar
NF60-06	4~6	105	123	126	0.59	0.79	0.89
NF60-12	4~6	160	190	223	0.99	1.25	1.49

※ The lifting force above does not include safety factor

Dimension

[Unit : mm]

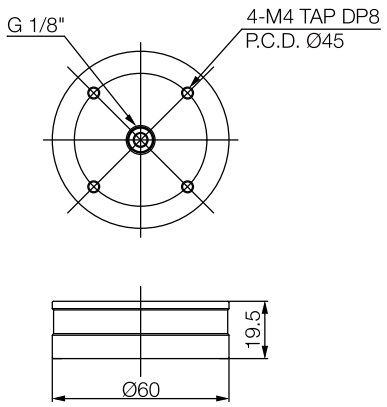

[Without peek points]

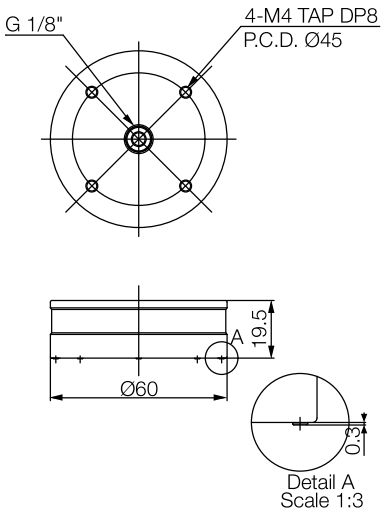

[With peek points]

Build an Ordering No.

NF60 - ◯◯ - ◯ - ◯◯ - 18F : Pre-mounted fitting

1. Suction Cup

1. Suction cup	Description	Weight (g)	Symbol
	Floating suction cup, 60mm diameter, Aluminum, Fitting, G1/8 female fitting	130.1	NF60-06-A-18F
	Floating suction cup, 60mm diameter, Peek, G1/8 female fitting	62.22	NF60-06-P-18F
	Floating suction cup, 60mm diameter, Large flow, Aluminum, G1/8 female fitting	129.6	NF60-12-A-18F
	Floating suction cup, 60mm diameter, Large flow, Peek, G1/8 female fitting	62.47	NF60-12-P-18F
	Floating suction cup, 60mm diameter, 9-Peek points, Aluminum, G1/8 female fitting	130.25	NF60-06-9P-18F
	Floating suction cup, 60mm diameter, 9-Peek points, Peek, G1/8 female fitting	62.37	NF60-06-P-9P-18F
	Floating suction cup, 60mm diameter, Large flow, 9-Peek points, Aluminum, G1/8 female fitting	129.75	NF60-12-9P-18F
	Floating suction cup, 60mm diameter, Large flow, 9-Peek points, Peek, G1/8 female fitting	62.62	NF60-12-P-9P-18F

NF-RA Series

Features and Strengths

Integrated with multi-stage vacuum generator
Large vacuum flow and powerful suction force in non-contact handling in non-contact handling
Vacuum port on the side – Available to keep clean on surface for transfer
Vacuum flow adjustment

Advantages

Handling thin and porous items without damage and deformation
High vacuum flow and efficient compressed air-consumption

Application

Examples of use

Circuit boards, Solar cells, PCB boards, Wafer, Food, Paper
Film, CDs and DVDs

Available size option

Model	Description
NF40-06-RA-18F	Floating suction cup, Side vacuum, Ø40
NF40-12-RA-18F	Floating suction cup, Side vacuum, Ø40
NF60-06-RA-18F	Floating suction cup, Side vacuum, Ø60
NF60-12-RA-18F	Floating suction cup, Side vacuum, Ø60

Recommended Lifting Force (Max.)

Model	Operating Pressure (bar)	Air Consumption (Nl/min)			Lifting Force (Kg) – Perpendicular			Page
		4bar	5bar	6bar	4bar	5bar	6bar	
NF40-06-RA-18F	4~6							574
NF40-12-RA-18F	4~6	118	140	162	0.5~0.6	0.6~0.7	0.7~0.8	574
NF60-06-RA-18F	4~6							576
NF60-12-RA-18F	4~6	160	190	223	0.5~1.2	0.7~1.5	0.9~1.8	576

※ The lifting force above does not include safety factor

Principle of Operation

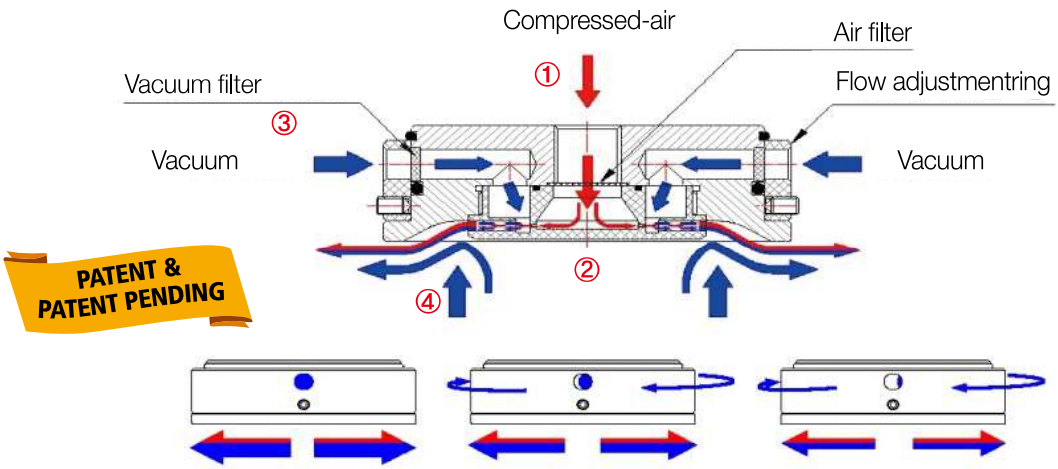

① Compressed air supplies to the compressed air port
② Compressed air is passing through the 1st and 2nd nozzle (multi-stage vacuum nozzle)
③ High flow vacuum is created from its side port (max. vacuum flow and level of vacuum can be achieved)
④ High vacuum lifting force is generated.

Vacuum nozzles are not blocked by particle/ dust while it is operated.

NF40-RA

Features and Strengths

Integrated with multi-stage vacuum generator
Large vacuum flow and powerful suction force in non-contact handling in non-contact handling
Vacuum port on the side – Available to keep clean on surface for transfer
Vacuum flow adjustment

Examples of use

Circuit boards, Solar cells, PCB boards, Wafer, Food, Paper
Film, CDs and DVDs

Recommended Lifting Force (Max.)

Model	Operating Pressure (bar)	Air Consumption (Nl/min)			Lifting Force (Kg) – Perpendicular		
		4bar	5bar	6bar	4bar	5bar	6bar
NF40-06-RA-18F	4~6						
NF40-12-RA-18F	4~6	118	140	162	0.5~0.6	0.6~0.7	0.7~0.8

※ The lifting force above does not include safety factor

Dimension

[Unit : mm]

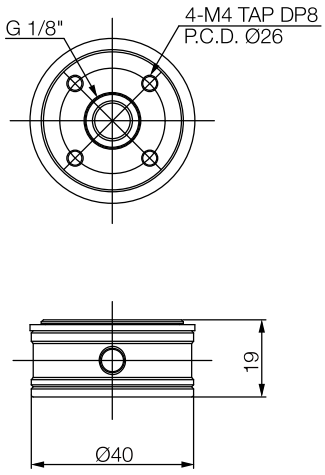

[With 18F fitting]

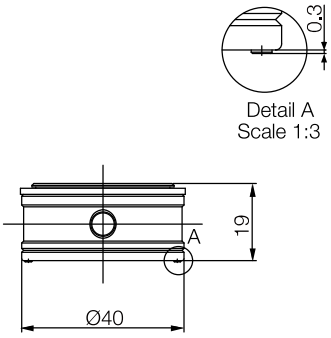

[With peek points]

Build an Ordering No.

NF40 - ◯◯ - RA - ◯◯ - 18F : Pre-mounted fitting

1. Suction Cup

1. Suction cup	Description	Weight (g)	Symbol
	Adjustable floating suction cup, 40mm diameter, Aluminum, G1/8 female fitting	47.8	NF40-06-RA-18F
	Adjustable floating suction cup, 40mm diameter, 5-Peek points, Aluminum, G1/8 female fitting	47.84	NF40-06-RA-5P-18F
	Adjustable floating suction cup, 40mm diameter, 9-Peek points, Aluminum, G1/8 female fitting	47.91	NF40-06-RA-9P-18F
	Adjustable floating suction cup, 40mm diameter, Large flow, Aluminum, G1/8 female fitting	47.91	NF40-12-RA-18F
	Adjustable floating suction cup, 40mm diameter, Large flow, 5-Peek points, Aluminum, G1/8 female fitting	47.6	NF40-12-RA-5P-18F
	Adjustable floating suction cup, 40mm diameter, Large flow, 9-Peek points, Aluminum, G1/8 female fitting	47.71	NF40-12-RA-9P-18F

NF60-RA

Features and Strengths

Integrated with multi-stage vacuum generator
Large vacuum flow and powerful suction force in non-contact handling in non-contact handling
Vacuum port on the side – Available to keep clean on surface for transfer
Vacuum flow adjustment

Examples of use

Circuit boards, Solar cells, PCB boards, Wafer, Food, Paper
Film, CDs and DVDs

Recommended Lifting Force (Max.)

Model	Operating Pressure (bar)	Air Consumption (Nl/min)			Lifting Force (Kg) – Perpendicular		
		4bar	5bar	6bar	4bar	5bar	6bar
NF60-06-RA-18F	4~6						
NF60-12-RA-18F	4~6	160	190	223	0.5~1.2	0.7~1.5	0.9~1.8

※ The lifting force above does not include safety factor

Dimension

[Unit : mm]

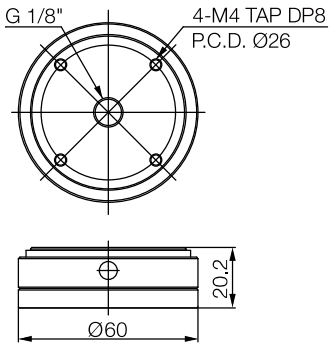

[With 18F fitting]

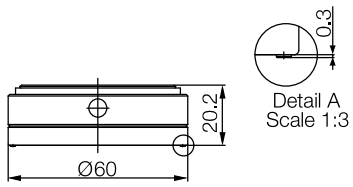

[With peek points]

Build an Ordering No.

NF60 - ◯◯ - RA - ◯◯ - 18F : Pre-mounted fitting

1. Suction Cup

1. Suction cup	Description	Weight (g)	Symbol
	Adjustable floating suction cup, 60mm diameter, Aluminum, G1/8 female fitting	128.2	NF60-06-RA-18F
	Adjustable floating suction cup, 60mm diameter, 5-Peek points, Aluminum, G1/8 female fitting	128.24	NF60-06-RA-5P-18F
	Adjustable floating suction cup, 60mm diameter, 9-Peek points, Aluminum, G1/8 female fitting	128.34	NF60-06-RA-9P-18F
	Adjustable floating suction cup, 60mm diameter, Large flow, Aluminum, G1/8 female fitting	128	NF60-12-RA-18F
	Adjustable floating suction cup, 60mm diameter, 5-Peek points, Large flow, Aluminum, G1/8 female fitting	128.04	NF60-12-RA-5P-18F
	Adjustable floating suction cup, 60mm diameter, 9-Peek points, Large flow, Aluminum, G1/8 female fitting	128.11	NF60-12-RA-9P-18F

Solar Master

Features and Strengths

VMECA vacuum cartridge technology integrated
Low air consumption while achieving very fast and stable vacuum
Available for various sizes according to wafer size

Examples of use

Wafers, Solar cells

Holding force

Model	Holding force (N) at different air inlet pressure			
	3 bar	4 bar	5 bar	6 bar
SM05	112.7	120.4	132.4	147

Air consumption

Model	Air consumption (Nl/min) at different air inlet pressure			
	1.7 bar	2.2 bar	3.14 bar	4 bar
SM05	34	40	52	64

Dimensions

[Unit : mm]

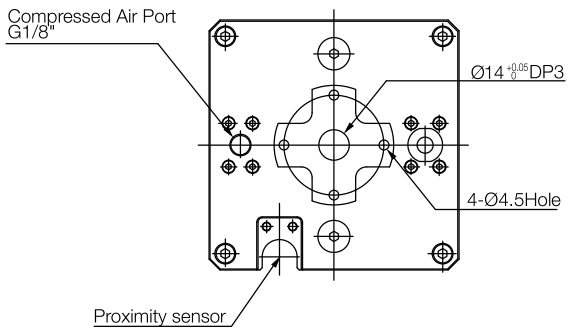

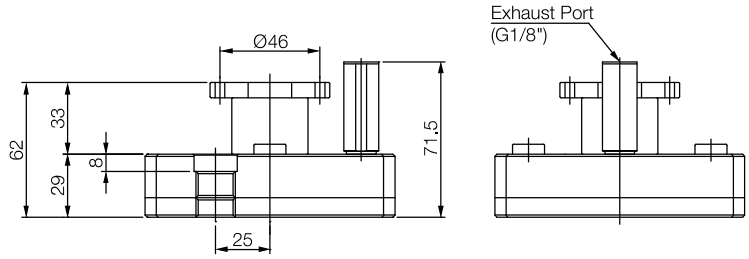

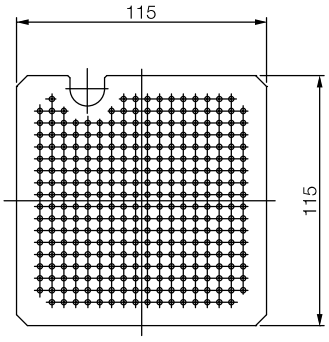

Build an Ordering No.

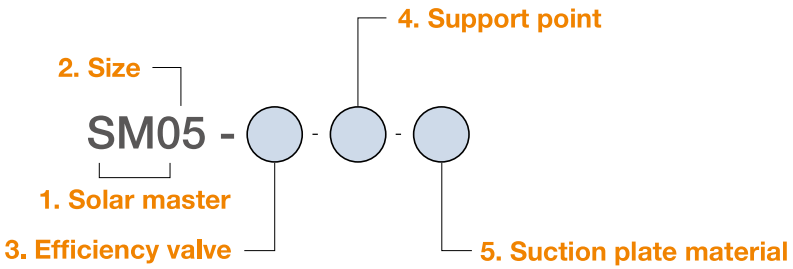

1. Solar master	Description	Symbol
	Wafer size 5”, With free flow silencer, Integrated with the VMECA Vacuum Cartridge	SM

2. Size	Description	Symbol
	115mm X 115mm X H62mm	05

3. Efficiency valve	Description	Symbol
	No efficiency valve	Blank
	Efficiency valve	EV

4. Support point	Description	Symbol
	No support point	Blank
	Support point	P

5. Suction plate material	Description	Symbol
	Aluminum	A
	PEEK	PK
	POM	PO

Needle Gripper

Features and Strengths

Double-acting pneumatic cylinder for safe handling of work pieces
Variable needle stroke for widely covering applications
Easy operation and maintenance

Examples of use

Textiles, Fleece, Shoes soles, Carpets, Metal foam, Felt
Insulating mats, Foam materials

Specifications

Description	VHN110–12P
Number of needles	12
Needle diameter	1.5 Ø
Stroke	0 ~ 3.5 mm
Operating pressure	3 ~ 6 bar
Operating temperature	5 ~ 60 °C
Weight	500 g
Material of Needles	S45C

Dimensions

[Unit : mm]

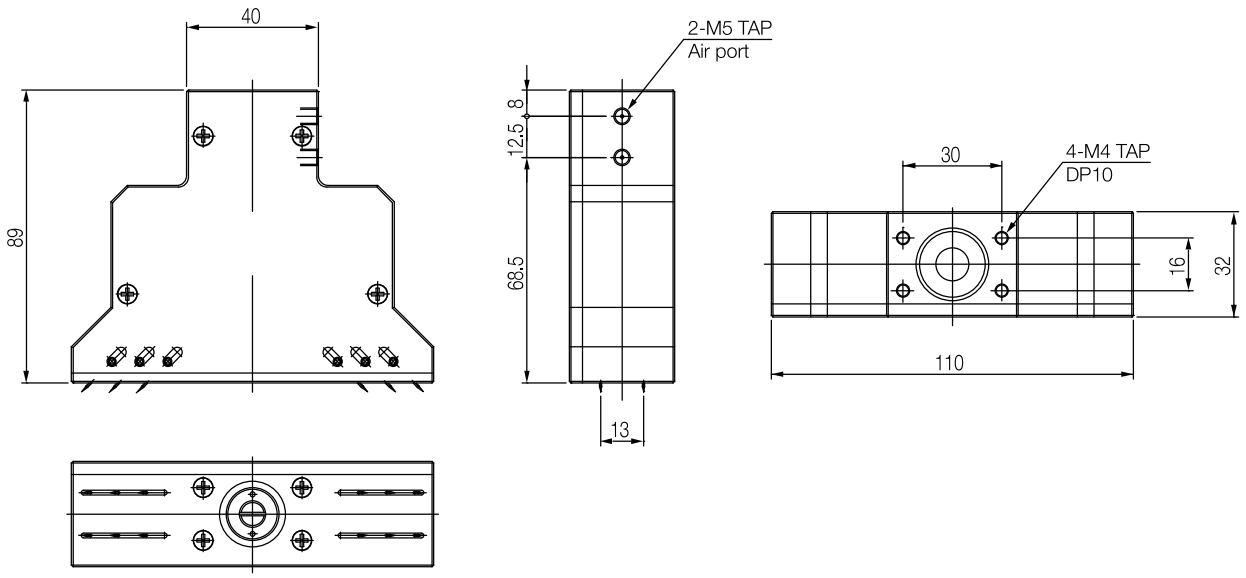

Build an Ordering No.

VHN110–12P

1. Needle Gripper

1. Needle Gripper	Description	Symbol
	Needle Gripper, 110mm size, Aluminum Body, 12 needles, Needle dia.1.5mm	VHN110–12P

Adjustable needle length

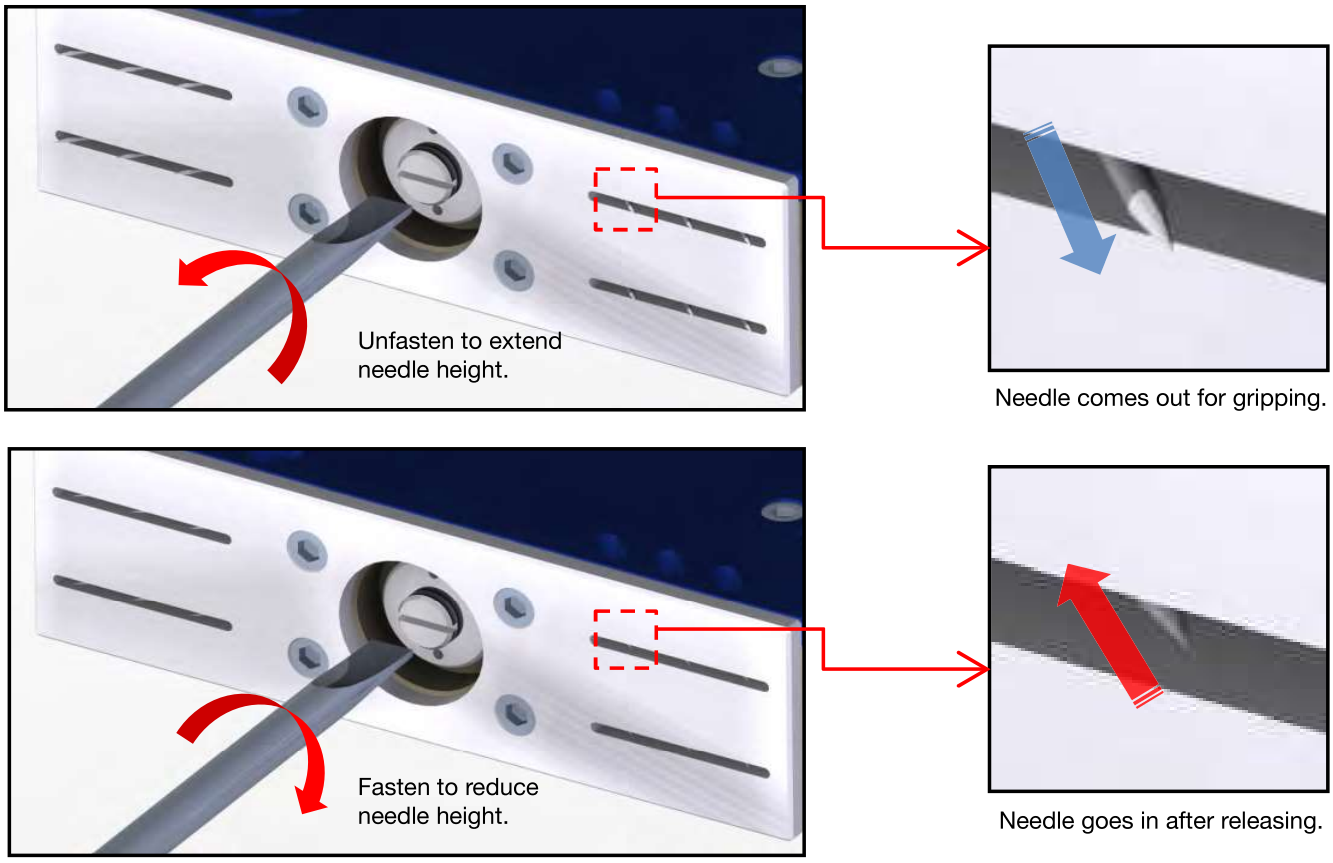

G16&G20 Series

Features and Strengths

Integrated with VMECA vacuum cartridge pump
Excellent grip for both even & uneven surface products with flexible sealing form
Available for customized size according to applications

Examples of use

PCB boards, Solar cell, Porous material products

Performance data

Model	Max. Vacuum Level (-kPa)	Feed pressure (Bar)	Air Consumption	Working Temperature	Noise Level (dBA)
G16x60-C202-B	-90	3~6	32 Nl/min at 4bar	-20°C ~ 80°C	55 ~ 65
G16X108–C203–B	-90	3~6	32 Nl/min at 4bar	-20°C ~ 80°C	55 ~ 65
G20x60-C202-B	-90	3~6	32 Nl/min at 4bar	-20°C ~ 80°C	55 ~ 65
G20x108-C203-B	-90	3~6	32 Nl/min at 4bar	-20°C ~ 80°C	55 ~ 65

Performance data

Model	Holding force at 60% Sealing (N)	Holding force at 80% Sealing (N)	Holding force at 100% Sealing (N)	Net weight (g)
G16x60-C202-B	6.8	11	16	57.0
G16x108-C203-B	8.0	22	32	85.0
G20x60-C202-B	6.8	11	16	64.0
G20x108-C203-B	8.0	22	32	95.0

※ Actual holding force might be different according to surface and porousness of product
※ In above test result, the safety factor is not considered.

Build an Ordering No.

G20x108–C203–B

1. Mini V-GRIP

1. Mini V-GRIP	Description	Symbol
	Mini V-GRIP, Width 16mm x Length 60mm, 2stage cartridge	G16X60–C202–B
	Mini V-GRIP, Width 16mm x Length 108mm, 3stage cartridge	G16X108–C203–B
	Mini V-GRIP, Width 20mm x Length 60mm, 2stage cartridge	G20x60-C202-B
	Mini V-GRIP, Width 20mm x Length 108mm, 3stage cartridge	G20x108-C203-B

Spare Parts – Flexible sealing foam

Part No.	Description
16X60–S08	Flexible sealing foam for G16x60-C202-B
16X108–S08	Flexible sealing foam for G16x108-C203-B
20X60–S08	Flexible sealing foam for G20x60-C202-B
20X108–S08	Flexible sealing foam for G20x108-C203-B

G 30 series

Features and Strengths

- Integrated VMECA cartridge technology inside
- Handles various products with different shapes, sizes and porous material
- Flexible sealing foam(EPDM) for excellent gripping
- Check valve and filter integrated
- Durable and light weight aluminum body frame
- Easy Installation and low maintenance

Specifications

Spec.	G30
Max. Vacuum level	-90 kPa
Max. Open Vacuum flow	146 Nl/min
Max. Feed pressure	7 bar
Temperature	-20 ~ 80 ℃
Noise level	55 ~ 65 dbA

Characteristics

Model	Air inlet Pressure psi (bar)	Air consumption Nl/m (scfm)	Max. Vacuum flow Nl/m (scfm)	Max. Vacuum level -kPa (-mmHg)
G30X100-LC1	87 (6)	83.5 (2.95)	111 (3.92)	90 (675)
G30X150-LC1				
G30X200-L1	87 (6)	83.5 (2.95)	146 (5.16)	90 (675)
G30X250-L1				
G30X300-L1				
G30X400-L1				
G30X500-L1				
G30X600-L1				

Holding Force Ratio according to Length

■ EL type (Oval shape suction hole)

Model	Holding force at 40% Sealing (N)	Holding force at 60% Sealing (N)	Holding force at 80% Sealing (N)	Holding force at 100% Sealing (N)	Product weight (Kg)
G30X100-L1-EL	Please contact VMECA	51	Please contact VMECA	77	0.159
G30X150-L1-EL	43	78	108	168	0.243
G30X200-L1-EL	49	106	151	173	0.344
G30X250-L1-EL	69	120	170	206	0.418
G30X300-L1-EL	72	132	182	244	0.503
G30X400-L1-EL	80	158	295	443	0.671
G30X500-L1-EL	97	190	377	526	0.823
G30X600-L1-EL	111	231	487	604	0.979

※ The holding force above is actual test result, not considered with a safety factor.

Holding Force Ratio according to Length

■ ES type (Round shape suction hole)

Model	Holding force at 40% Sealing (N)	Holding force at 60% Sealing (N)	Holding force at 80% Sealing (N)	Holding force at 100% Sealing (N)	Product weight (Kg)
G30X100-LC1-ES	Please contact VMECA	36	Please contact VMECA	55	0.159
G30X150-LC1-ES	31	55	76	120	0.243
G30X200-L1-ES	33	75	106	123	0.343
G30X250-L1-ES	48	84	120	145	0.418
G30X300-L1-ES	51	92	126	168	0.503
G30X400-L1-ES	57	110	205	308	0.669
G30X500-L1-ES	69	132	263	371	0.822
G30X60-L1-ES	78	149	343	420	0.978

※ The holding force above is actual test result, not considered with a safety factor.

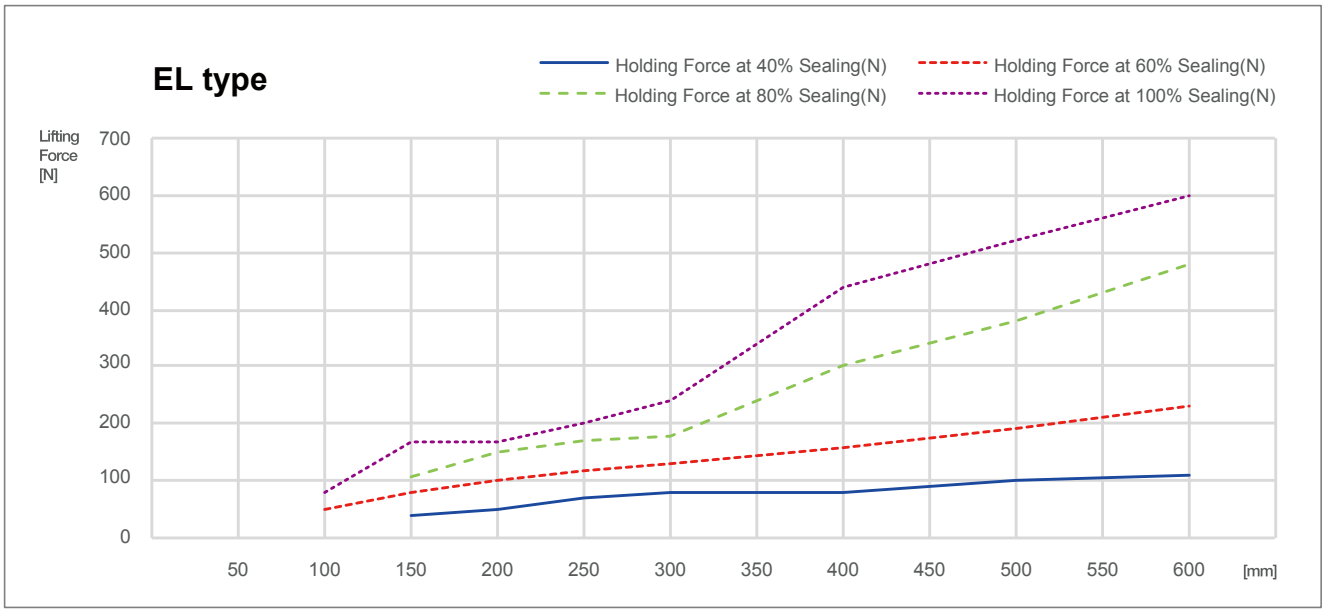

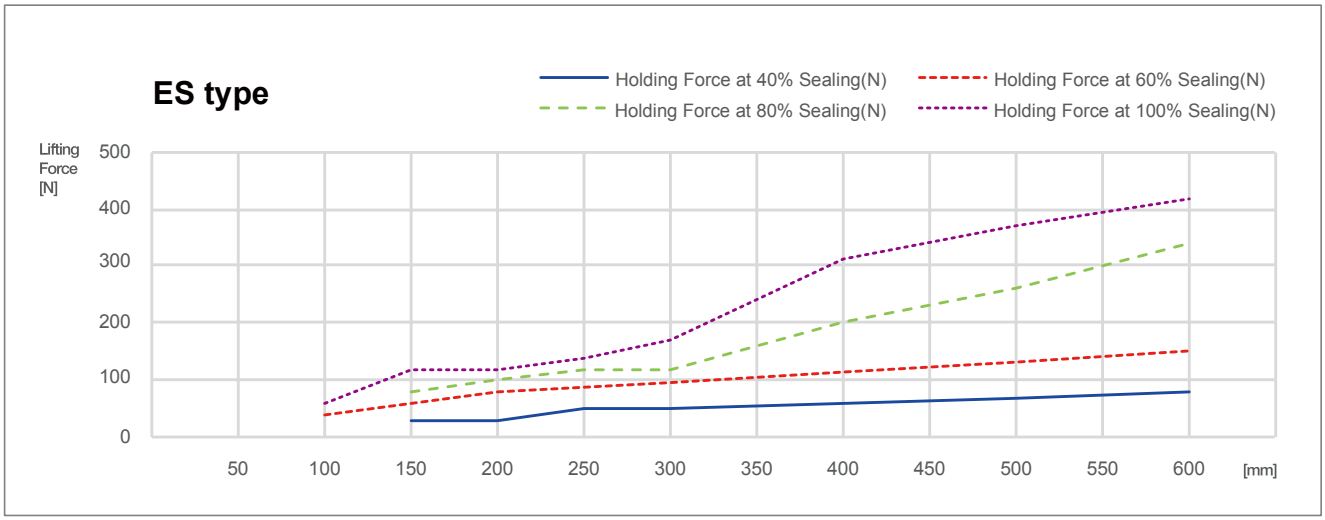

Dimensions – G30 series (100~600mm)

[Unit : mm]

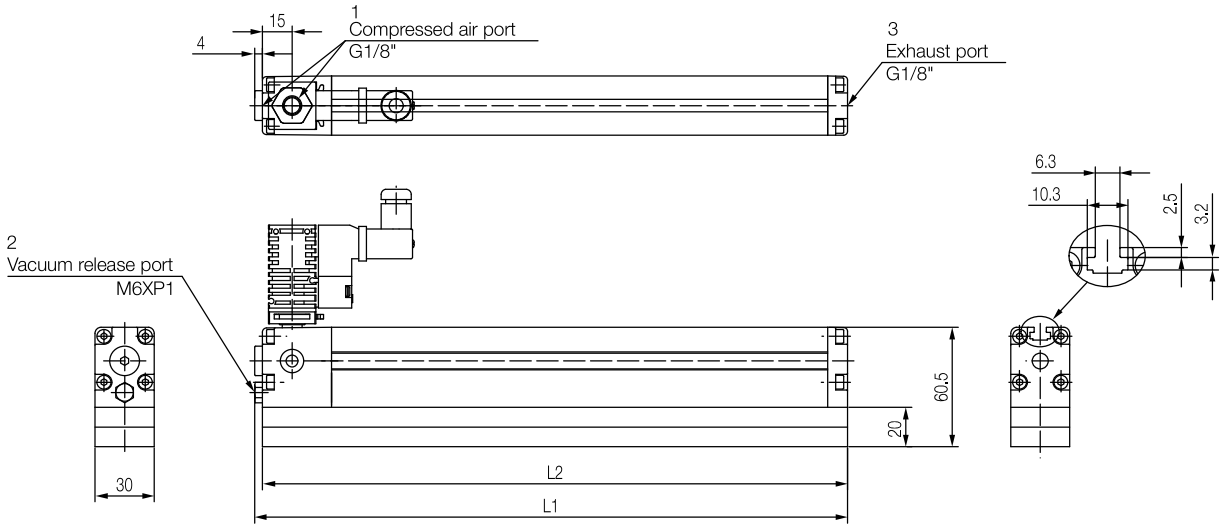

▶ EL type

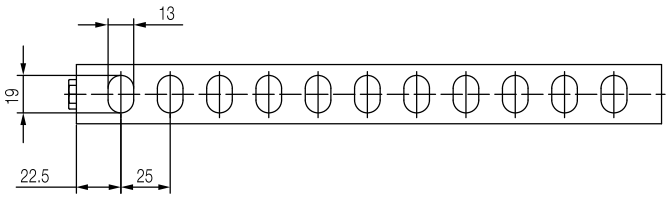

▶ ES type

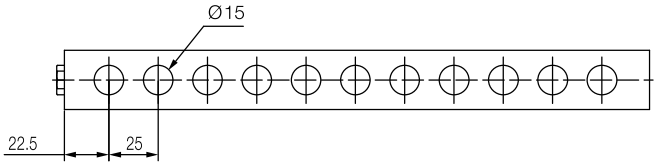

Model	Length	Sponge pad length	Vacuum port	Compressed air valve
	L1	L2	The number of port	Type
G30X100-LC1-ES	102.1	96.6	3	VMS18
G30X150-LC1-ES	150.6	146.6	5	
G30X200-L1-ES	200.6	196.6	7	
G30X250-L1-ES	250.6	246.6	9	
G30X300-L1-ES	300.6	296.6	11	
G30X400-L1-ES	400.6	396.6	15	
G30X500-L1-ES	500.6	496.6	19	
G30X600-L1-ES	600.6	596.6	23	

Build an Ordering No.

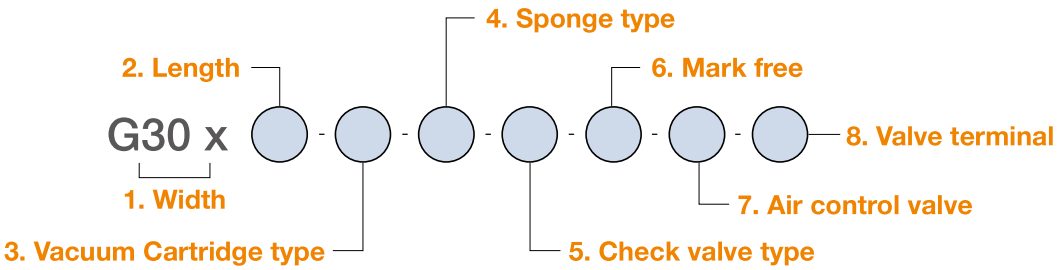

1. Width	Description	Symbol
	G series, Width 30mm	G30

2. Length	Description	Symbol
	Length 100mm	100
	Length 150mm	150
	Length 200mm	200
	Length 250mm	250
	Length 300mm	300
	Length 400mm	400
	Length 500mm	500
	Length 600mm	600

3. Vacuum Cartridge type	Description	Symbol
	VC252 -cartridges for length 100mm ~ 150mm	LC1
	VC253 -cartridges for length 200mm ~ 600mm	L1

4. Sponge type	Description	Symbol
	Oval shape suction hole	EL
	Round shape suction hole	ES

5. Check valve type	Description	Symbol
	For non-leakage application	1
	For leakage rate 1~10% application	2
	* The result above is with VSM203 and VU50 suction cup and it is for your reference, not for absolute standard	

6. Mark free	Description	Symbol
	Standard (No mark free)	Blank
	Mark free	A

7. Air control valve	Description	Symbol
	No air control valve	Blank
	Air control valve, AC110V	A1
	Air control valve, AC220V	A2
	Air control valve, DC24V	A3
	Double solenoid valve, AC110V	D1
	Double solenoid valve, AC220V	D2
	Double solenoid valve, DC24V	D3

8. Valve terminal	Description	Symbol
	Solenoid Terminal, DIN, Lamp, No LW	DL

G 60 series

Features and Strengths

- Integrated VMECA cartridge technology inside
- Handles various products with different shapes, sizes and porous material
- Flexible sealing foam(EPDM) for excellent gripping
- Check valve and filter integrated
- Durable and light weight aluminum body frame
- Easy Installation and low maintenance

Specifications

Spec.	G60
Max. Vacuum level	-90 kPa
Max. Open Vacuum flow	292 Nl/min
Max. Feed pressure	7 bar
Temperature	-20 ~ 80ºC
Noise level	55 ~ 65 dbA

Characteristics

Model	Air inletPressure psi (bar)	Air consumption Nl/m (scfm)	Max. Vacuum flow Nl/m (scfm)	Max. Vacuum level -kPa (-mmHg)
G60X100-LC2	87 (6)	167 (5.897)	222 (7.84)	90 (675)
G60X150-LC2				
G60X200-L2	87 (6)	167 (5.897)	292 (10.31)	90 (675)
G60X250-L2				
G60X300-L2				
G60X400-L2				
G60X500-L2				
G60X600-L2				

Holding Force Ratio according to Length

■ EL type (Oval shape suction hole)

Model	Holding force at 40% Sealing (N)	Holding force at 60% Sealing (N)	Holding force at 80% Sealing (N)	Holding force at 100% Sealing (N)	Product weight (Kg)
G60X100-LC2-EL	Please contact VMECA	102	Please contact VMECA	154	0.319
G60X150-LC2-EL	86	156	216	336	0.486
G60X200-L2-EL	98	212	302	346	0.689
G60X250-L2-EL	138	240	340	412	0.836
G60X300-L2-EL	144	264	364	488	1.007
G60X400-L2-EL	160	316	590	886	1.343
G60X500-L2-EL	194	380	754	1052	1.646
G60X600-L2-EL	222	462	974	1208	1.947

※ The holding force above is actual test result, not considered with a safety factor.

Holding Force Ratio according to Length

■ ES type (Round shape suction hole)

Model	Holding force at 40% Sealing (N)	Holding force at 60% Sealing (N)	Holding force at 80% Sealing (N)	Holding force at 100% Sealing (N)	Product weight (Kg)
G60X100-LC2-ES	Please contact VMECA	72	Please contact VMECA	110	0.319
G60X150-LC2-ES	62	110	152	240	0.486
G60X200-L2-ES	66	150	212	246	0.686
G60X250-L2-ES	96	168	240	290	0.836
G60X300-L2-ES	102	184	252	336	1.006
G60X400-L2-ES	114	220	410	616	1.369
G60X500-L2-ES	138	264	526	742	1.644
G60X600-L2-ES	156	298	686	840	1.947

※ The holding force above is actual test result, not considered with a safety factor.

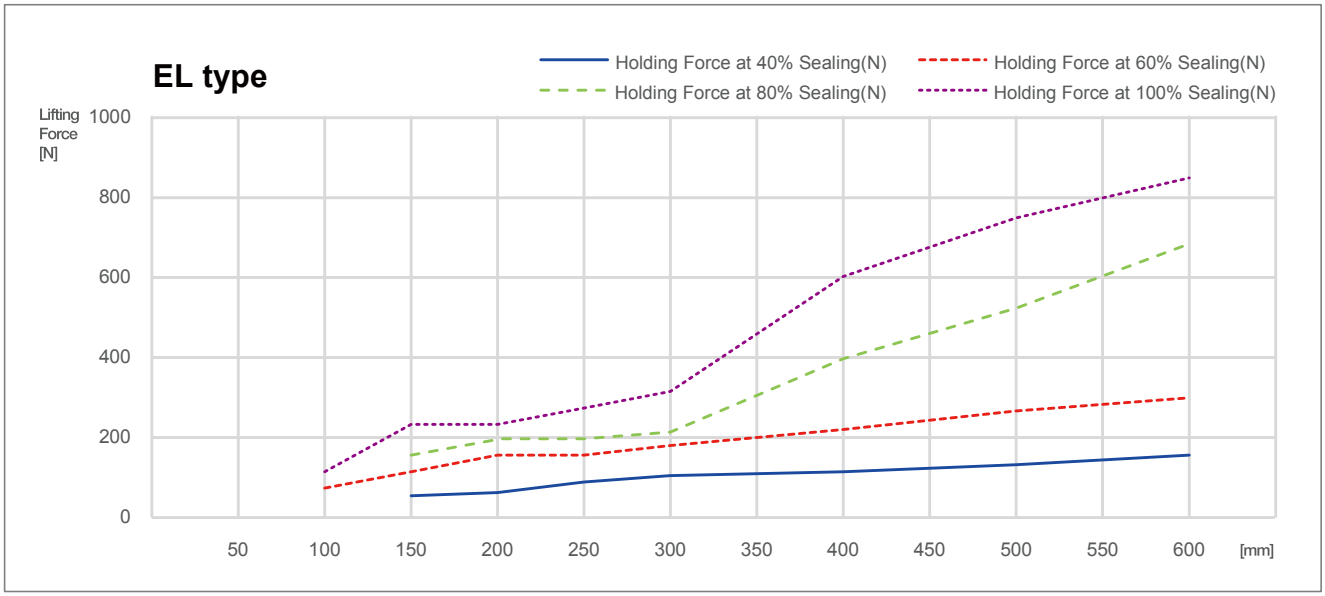

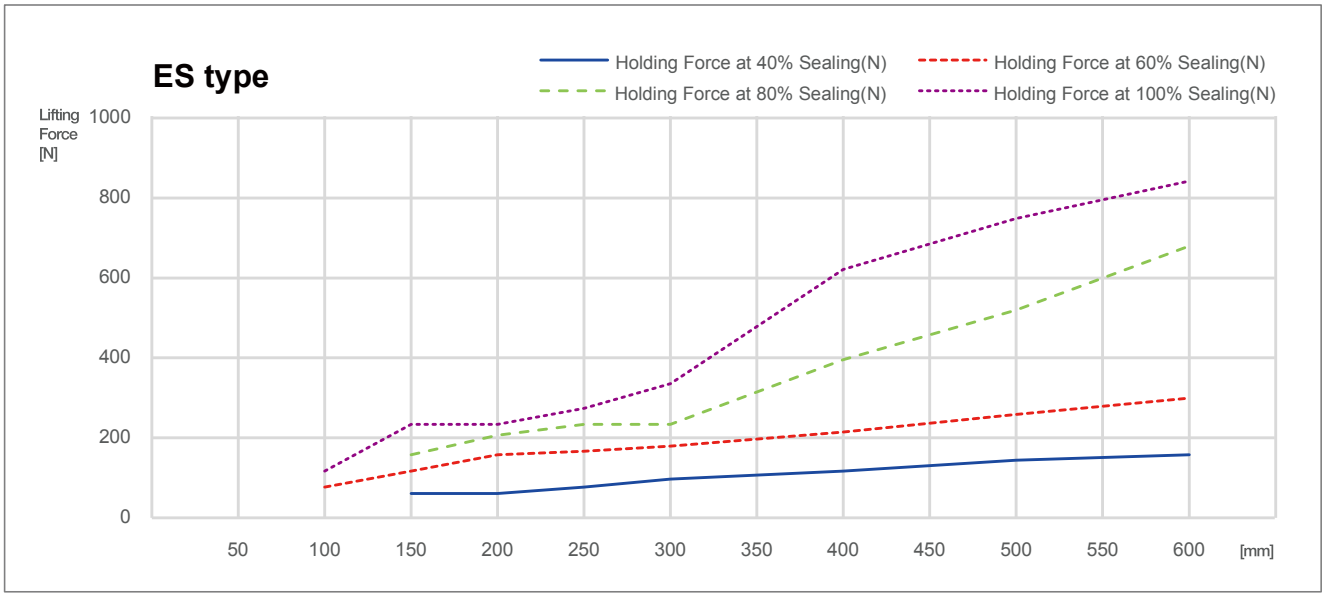

Dimensions – G60 series (100~600mm)

[Unit : mm]

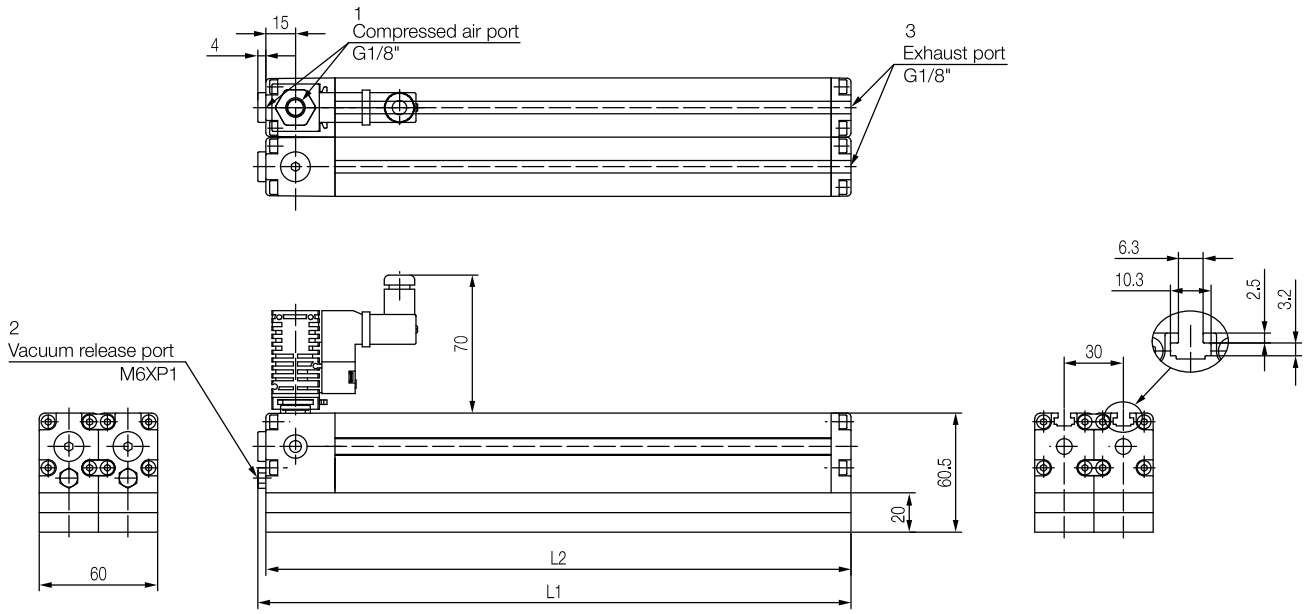

▶ EL type

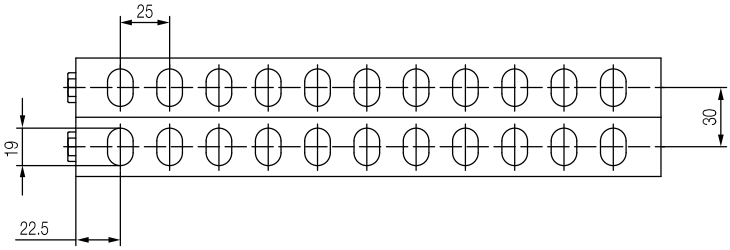

▶ ES type

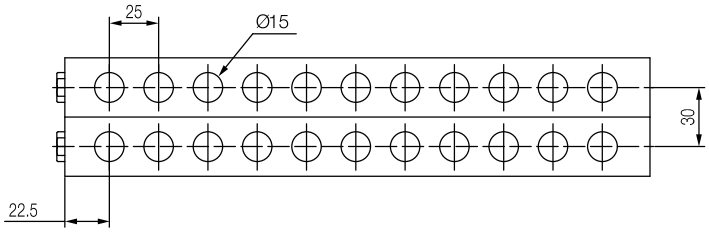

Model	Length	Sponge pad length	Vacuum port	Compressed air valve
	L2	L2	The number of port	Type
G60X100-LC2-ES	102.1	96.6	6	MS18
G60X150-LC2-ES	150.6	146.6	10	
G60X200-L2-ES	200.6	196.6	7	
G60X250-L2-ES	250.6	246.6	18	
G60X300-L2-ES	300.6	296.6	22	
G60X400-L2-ES	400.6	396.6	30	
G60X500-L2-ES	500.6	496.6	38	
G60X600-L2-ES	600.6	596.6	46	

Build an Ordering No.

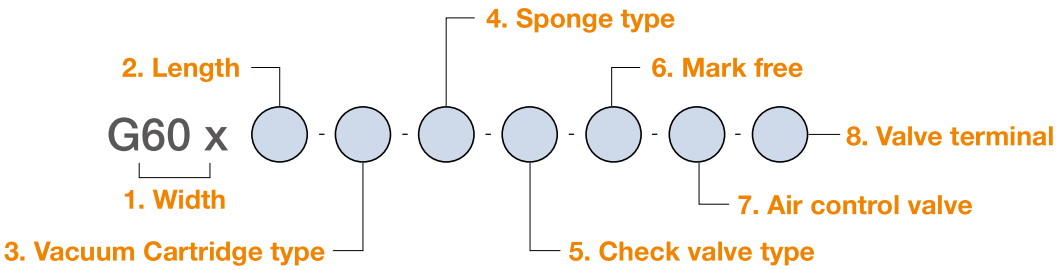

1. Width	Description	Symbol
	G series, Width 60mm	G60

2. Length	Description	Symbol
	Length 100mm	100
	Length 150mm	150
	Length 200mm	200
	Length 250mm	250
	Length 300mm	300
	Length 400mm	400
	Length 500mm	500
	Length 600mm	600

3. Vacuum Cartridge type	Description	Symbol
	VC252 -cartridges for length 100mm ~ 150mm	LC2
	VC253 -cartridges for length 200mm ~ 600mm	L2

4. Sponge type	Description	Symbol
	Oval shape suction hole	EL
	Round shape suction hole	ES

5. Check valve type	Description	Symbol
	For non-leakage application	1
	For leakage rate 1~10% application	2
	* The result above is with VSM203 and VU50 suction cup and it is for your reference, not for absolute standard.	

6. Mark free	Description	Symbol
	Standard (No mark free)	Blank
	Mark free	A

7. Air control valve	Description	Symbol
	No air control valve	Blank
	Air control valve, AC110V	A1
	Air control valve, AC220V	A2
	Air control valve, DC24V	A3
	Double solenoid valve, AC110V	D1
	Double solenoid valve, AC220V	D2
	Double solenoid valve, DC24V	D3

8. Valve terminal	Description	Symbol
	Solenoid Terminal, DIN, Lamp, No LW	DL